Mallinumero EM404MP BRUSHCUTTER ATTACHMENT

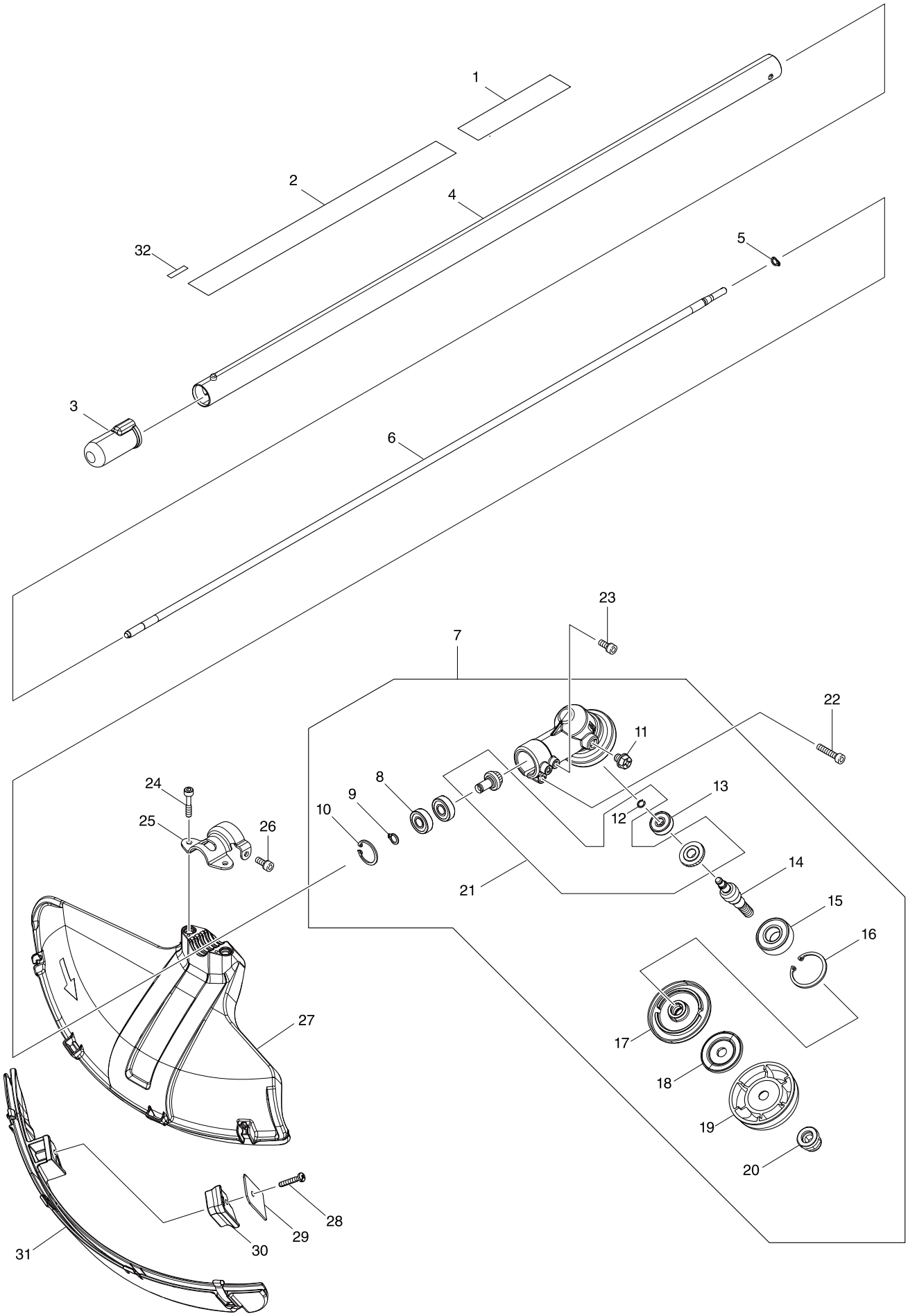

Mallinumero EM404MP BRUSHCUTTER ATTACHMENT

Nimike	Osanumero	Kuvaus	I/C nu	MÄÄRÄ	N/O	Opt. 1	Opt. 2	HUOMAUTUS
001	819312-8	MAKITA LOGO LABEL		1				
002	813T40-7	CAUTION LABEL		1				
003	424434-7	CAP 24		1				
004	141010-9	SHAFT PIPE A COMPLETE		1				
005	961003-8	RETAINING RING S-7		1				
006	326088-5	SHAFT A		1				
007	126604-1	GEAR CASE ASSEMBLY		1				
D10		INC. 8-11,13-21						
008	210049-4	BALL BEARING 609ZZ		2				
009	257986-1	RETAINING RING (EXT) S-9		1				
010	257987-9	RETAINING RING (INT)R-24		1				
011	265590-2	+HEX.BOLT M8X10 WITH R		1				
012	232350-7	RING SPRING 6		1				
013	210030-5	BALL BEARING 627ZZ		1				
014	326854-0	CUTTER SHAFT		1				
015	211228-7	BALL BEARING 6202DDW		1				
016	257432-4	RETAINING RING R-35		1				
017	144312-2	RECEIVE WASHER COMPLETE		1				
018	347105-8	CLAMP WASHER		1				
019	457290-0	CUP		1				
020	252236-9	HEX. LOCK NUT M10-17		1				
021	183J08-0	SPIRAL BEVEL GEAR SET		1				
D10		INC. 12						
022	922242-5	HEX. SOCKET HEAD BOLT M5X25		1				
023	922216-6	HEX. SOCKET HEAD BOLT M5X14		1				
024	251513-6	H.S.H.BOLT M5X25		2				
025	347107-4	PROTECTOR CLAMP 24		1				
026	922216-6	HEX. SOCKET HEAD BOLT M5X14		1				
027	457271-4	PROTECTOR U 450		1				
028	266553-1	TAPPING SCREW 5X30		1				
029	347115-5	CUTTER		1				
030	457794-2	CUTTER EXTENSION		1				
031	144316-4	PROTECTOR U EXT. 420-450 COMP		1				
032	814A82-0	DATE CODE LABEL		1				
A01	782238-6	BOX WRENCH 17		1				