Model No. DA330D CORDLESS ANGLE DRILL

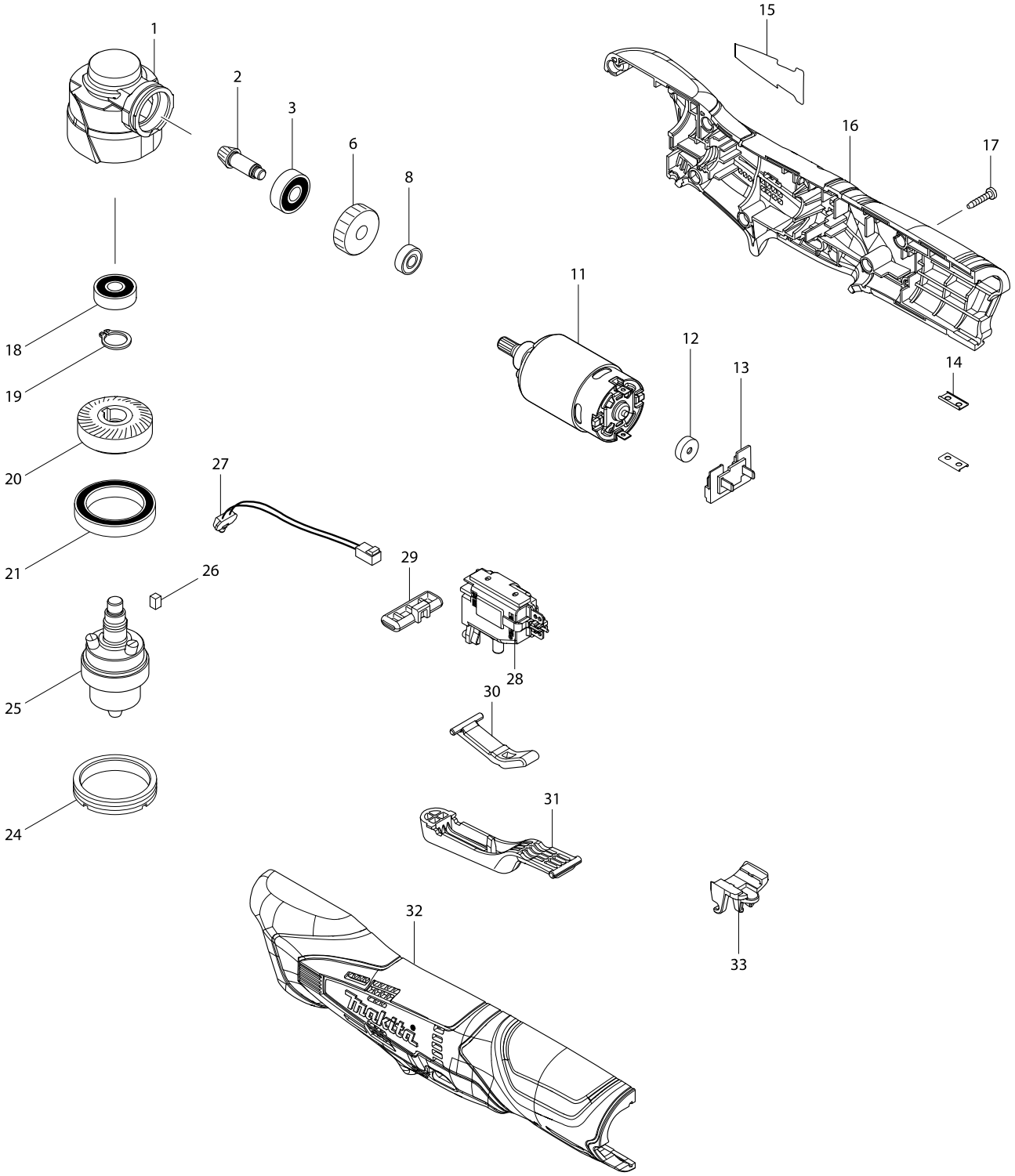

Model No. DA330D CORDLESS ANGLE DRILL

Item	Parts No.	Description	I/C	Qty	N/O	Opt. 1	Opt. 2	Note
001	318933-8	GEAR HOUSING		1				
002	227600-3	SPIRAL BEVEL GEAR 6		1				
003	210029-0	BALL BEARING 608ZZ		1				
006	227328-3	SPUR GEAR 42		1				
008	210033-9	BALL BEARING 696ZZ		1				
011	629978-4	DC MOTOR		1				
012	424529-6	CAP		1				
013	643830-2	TERMINAL		1				
014	345998-7	SET PLATE		2				
015	814B93-1	DA330D NAME PLATE		1				
016	187528-6	HOUSING SET		1				
D10		INC. 32						
017	266130-9	TAPPING SCREW BIND PT 3X16		7				
018	210029-0	BALL BEARING 608ZZ		1				
019	961052-5	RETAINING RING S-12		1				
020	227601-1	SPIRAL BEVEL GEAR 31		1				
021	211423-9	BALL BEARING 6806DDW		1				
024	285842-5	BEARING RETAINER 36-43		1				
025	766018-8	DRILL CHUCK S10		1				
026	254201-4	KEY 4		1				
027	620177-1	LED CIRCUIT		1				
028	650666-2	SWITCH		1				
029	450610-7	F/R CHANGE LEVER		1				
030	454100-2	LINK		1				
031	454102-8	SWITCH LEVER		1				
032	187528-6	HOUSING SET		1				
D10		INC. 16						
033	454099-1	KEY HOLDER		1				
034	424248-4	SPONGE SHEET 15-25		1	*			
034-1	424248-4	SPONGE SHEET 15-25	O	2				
A01	763450-7	CHUCK KEY S10		1				
A02	784244-7	+ BIT 2-50		1				
A03B	***DC10WA	DC10WA BATTERY CHARGER		1				
A04B	194550-6	BATTERY BL1013 SET		2				
A05B	821556-8	PLASTIC CARRYING CASE		1				
C10	162315-4	LATCH		2				
A06B	800U73-7	DA330DWE PLASTIC CASE LABEL		2				

Please order the parts with a part number.

Print Date 24/04/2015