Model No. BUB360 CORDLESS BLOWER

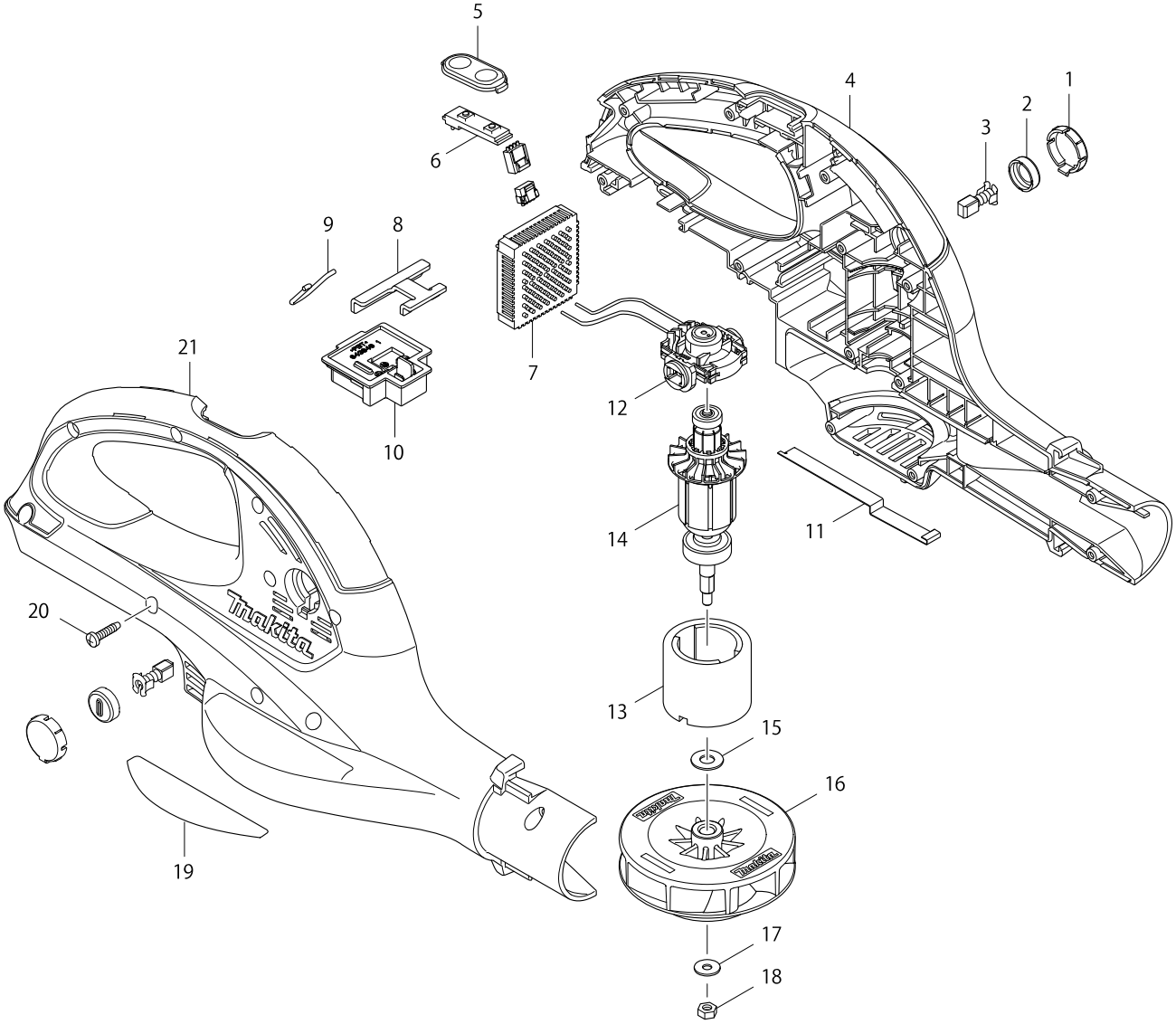

Model No. BUB360 CORDLESS BLOWER

Item	Parts No.	Description	I/C	Qty	N/O	Opt. 1	Opt. 2	Note
001	452145-4	HOLDER CAP COVER		2				
002	643929-3	BRUSH HOLDER CAP		2				
003	191971-3	CARBON BRUSH CB-430		1				
004	188936-4	HOUSING SET		1				
C10	263005-3	RUBBER PIN 6		2				
C20	891050-4	CAUTION LABEL		1				
D10		INC. 21						
005	140463-9	SWITCH PLATE COMPLETE		1				
006	631973-2	SWITCH UNIT		1				
007	631975-8	CONTROLLER		1	*			
007-1	620050-5	CONTROLLER	<	1	*			
007-2	638860-6	CONTROLLER UNIT	<	1				
008	346039-2	SUPPORT PLATE		1				
009	325973-9	HANGER		1				
010	643849-1	TERMINAL		1				
011	346328-5	EARTH PLATE		1				
012	638725-2	ENDBELL COMPLETE		1				
013	638420-4	YOKE UNIT		1	*			
013-1	638420-4	YOKE UNIT	O	1				
014	619260-9	ARMATURE		1				
015	253865-1	FLAT WASHER 8		1				
016	240124-2	FAN 95		1				
017	253194-2	FLAT WASHER 5		1				
018	252177-9	HEX.NUT M5-8		1				
019	868211-1	BUB360 NAME PLATE		1				
020	265995-6	TAPPING SCREW 4X18		13				
021	188936-4	HOUSING SET		1				
C10	263005-3	RUBBER PIN 6		2				
C20	891050-4	CAUTION LABEL		1				
D10		INC. 4						
A01	166095-4	SHOULDER BELT		1				
A02	452123-4	LONG NOZZLE		1				
E01	688165-4	LINE FILTER		1				

Please order the parts with a part number.

Print Date 25/10/2017