Model No. 6413 DRILL 10MM

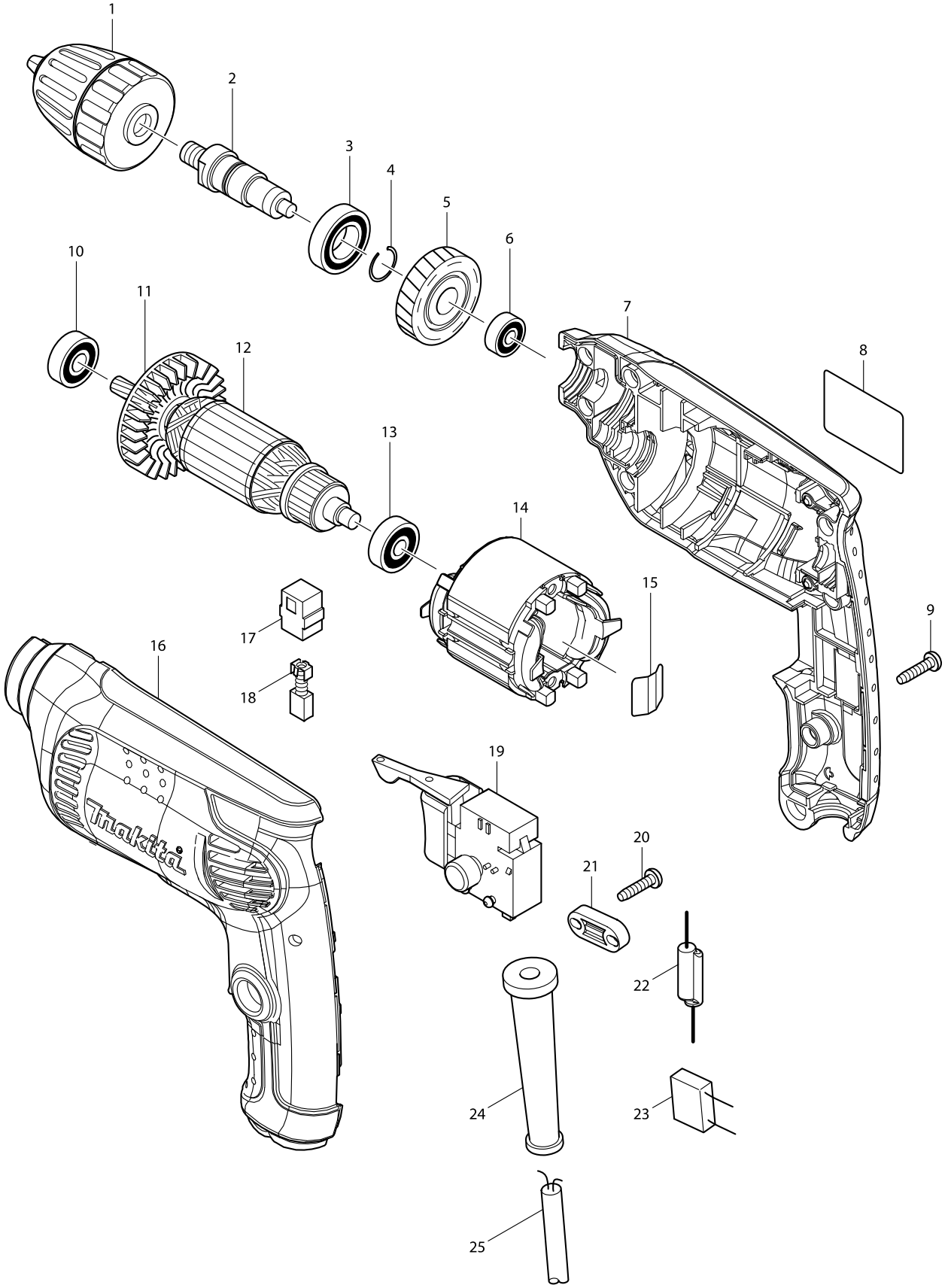

Model No. 6413 DRILL 10MM

Item	Parts No.	Description	I/C	Qty	N/O	Opt. 1	Opt. 2	Note
001	763180-0	KEYLESS DRILL CHUCK 10		1	*			
001-1	763242-4	KEYLESS DRILL CHUCK 10	<	1				
002	324376-4	SPINDLE		1				
003	211242-3	BALL BEARING 6902ZZ		1				
004	233925-5	RING SPRING 13		1				
005	226578-7	HELICAL GEAR 35		1				
006	210028-2	BALL BEARING 606ZZ		1				
007	188277-8	HOUSING SET		1				
C10	263002-9	RUBBER PIN 4		2				
D10		INC. 16						
008	863402-9	6413 NAME PLATE		1				
009	266326-2	TAPPING SCREW 4X18		7				
010	211032-4	BALL BEARING 608ZZ		1				
011	240066-0	FAN 52		1				
012	515699-3	ARMATURE ASS'Y 240V		1				
D10		INC. 10,11,13						
013	210030-5	BALL BEARING 627ZZ		1				
014	599369-2	FIELD ASS'Y 240V		1				
C10	654037-5	INSULATED TERM. FT1.25-M3		1	*			
C11	654037-5	INSULATED TERM. FT1.25-M3	O	1				
015	232210-3	LEAF SPRING		1				
016	188277-8	HOUSING SET		1				
C10	263002-9	RUBBER PIN 4		2				
D10		INC. 7						
017	643563-9	BRUSH HOLDER 5X8		2	*			
017-1	643566-3	BRUSH HOLDER 5X8	O	2				
018	191627-8	CARBON BRUSH CB-64		1				
019	650586-0	SWITCH DGQ-1104H		1				
020	266326-2	TAPPING SCREW 4X18		2				
021	687124-5	STRAIN RELIEF		1				
022	646151-1	CHOKE COIL		1				
023	645190-8	NOISE SUPPRESSOR		1				
024	682569-2	CORD GUARD 8-85		1				
025	665383-1	POWER SUPPLY CORD 1.0-2-2.0		1				

Please order the parts with a part number.